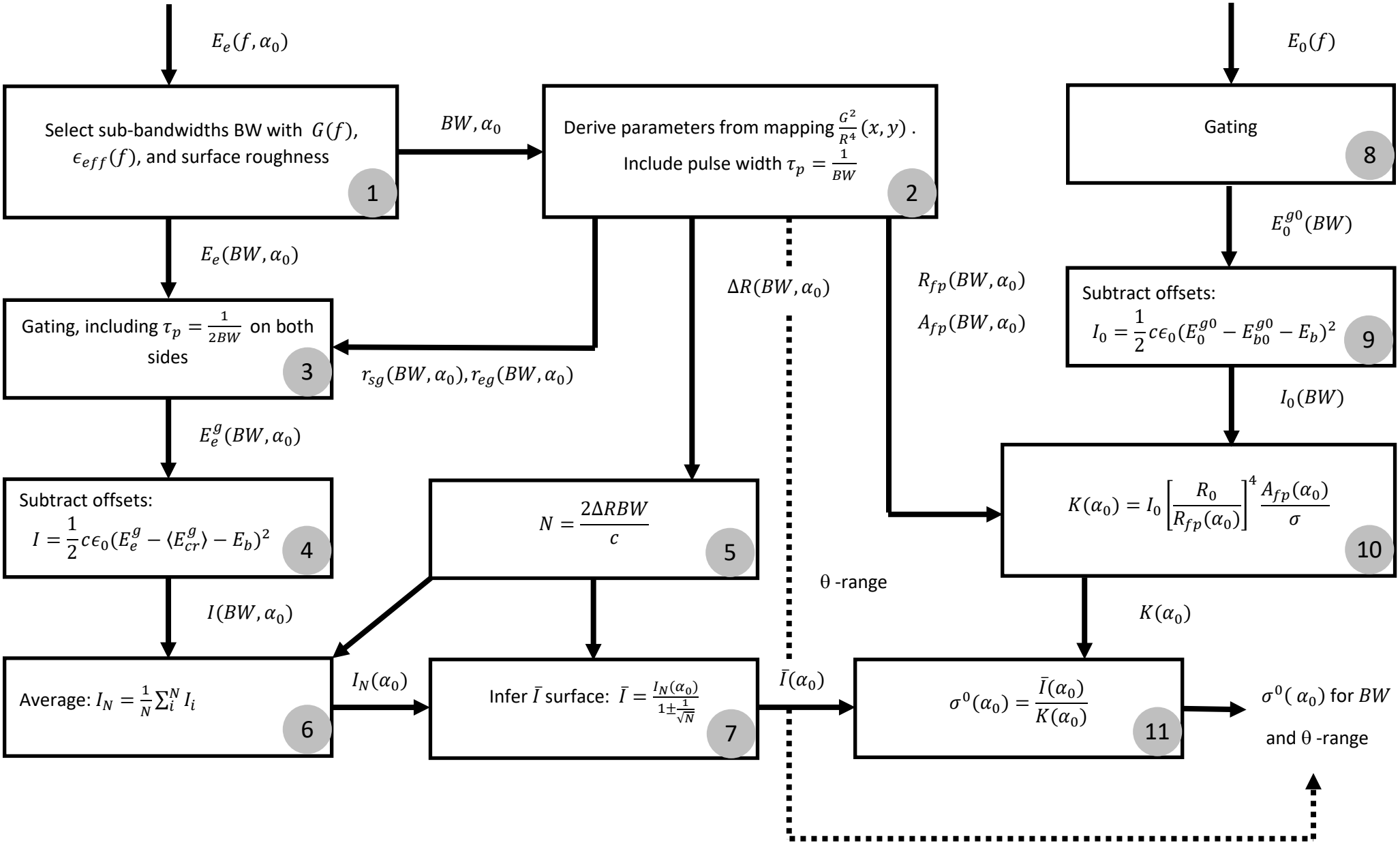
$E_e(f,\alpha_0)$
Select sub-bandwidths BW with $G(f)$, $\epsilon_{eff}(f)$, and surface roughness
1
BW,α_0
Derive parameters from mapping $\frac{G^2}{R^4}(x,y)$. Include pulse width $\tau_p = \frac{1}{BW}$
2
$E_0(f)$
Gating
8
$E_0^{g0}(BW)$
$E_e(BW,\alpha_0)$
Gating, including $\tau_p = \frac{1}{2BW}$ on both sides
3
$r_{sg}(BW,\alpha_0), r_{eg}(BW,\alpha_0)$
$\Delta R(BW,\alpha_0)$
$R_{fp}(BW,\alpha_0)$
$A_{fp}(BW,\alpha_0)$
Subtract offsets: $I_0 = \frac{1}{2}c\epsilon_0(E_0^{g0} - E_{b0}^{g0} - E_b)^2$
9
$I_0(BW)$
$E_e^g(BW,\alpha_0)$
Subtract offsets: $I = \frac{1}{2}c\epsilon_0(E_e^g - \langle E_{cr}^g\rangle - E_b)^2$
4
$N = \frac{2\Delta RBW}{c}$
5
$K(\alpha_0) = I_0\left[\frac{R_0}{R_{fp}(\alpha_0)}\right]^4 \frac{A_{fp}(\alpha_0)}{\sigma}$
10
θ -range
$I(BW,\alpha_0)$
$K(\alpha_0)$
Average: $I_N = \frac{1}{N}\sum_i^N I_i$
6
$I_N(\alpha_0)$
Infer $\bar{I}$ surface: $\bar{I} = \frac{I_N(\alpha_0)}{1\pm\frac{1}{\sqrt{N}}}$
7
$\bar{I}(\alpha_0)$
$\sigma^0(\alpha_0) = \frac{\bar{I}(\alpha_0)}{K(\alpha_0)}$
11
$\sigma^0(\alpha_0)$ for BW and θ -range